INDUSTRIAL PRESSURE TRANSMITTER

Swiss based Trafag is a leading international supplier of high quality sensors and monitoring instruments for measurement of pressure and temperature. The economic pressure transmitter ECT 8473 is based on the tried and true ECT line of transmitters with the wide media temperature range from -25 to 125°C. The enhanced accuracy and the low pressure ranges down to 100 mbar in combination with a comprehensive set of of features, materials and options makes the ECT 8473 pressure transmitter an ideal and versatile solution suitable for a wide variety of applications.

Applications

- Machine tools
- Hydraulics
- Water treatment

Features

- Economical
- Good media compatibility
- Relative or absolute pressure measurement
- Titanium version optional
- Frontal membrane optional

01/2016
Data sheet H72326p
Subject to change

Technical Data			
Measuring principle	Thick film on ceramic	Accuracy @ 25°C typ.	± 0.3 % FS typ. (± 0.5 % FS typ., ± 1 % FS typ.)
Measuring range	0 ... 0.1 to 0 ... 40 bar 0 ... 1.5 to 0 ... 500 psi	Media temperature	-25°C ... +125°C
Output signal	4 ... 20 mA, 0 ... 5 VDC, 1 ... 6 VDC, 0 ... 10 VDC, 0.5 ... 4.5 VDC ratiom.	Ambient temperature	-25°C ... +85°C (Cable PVC 22: -5°C ... +60°C)

Trafag Sensors & Controls
Switzerland

Industriestrasse 11
8608 Bubikon

Tel. +41 44 922 32 32
Fax +41 44 922 32 33

www.trafag.com
trafag@trafag.com

trafag sensors controls

Ordering information/type code

8473 . XX XX XX XX XX XX

Measuring range [1]

Pressure measurement range [bar]	Over pressure [bar]	Burst pressure [bar]		Pressure measurement range [psi]	Over pressure [psi]	Burst pressure [psi]	
0 ... 0.1	2	3	**66**	0 ... 1.5	30	45	**F6**
0 ... 0.16	2	3	**67**	0 ... 2	30	45	**F7**
0 ... 0.2	2	3	**68**	0 ... 2.5	30	45	**F8**
0 ... 0.4	2	3	**69**	0 ... 5	30	45	**F9**
0 ... 0.6	2	3	**70**	0 ... 7.5	30	45	**G0**
0 ... 1.0	2	3	**71**	0 ... 15	30	45	**G1**
0 ... 1.6	3.2	4.8	**73**	0 ... 20	40	60	**G3**
0 ... 2.5	5	7.5	**75**	0 ... 30	60	90	**G5**
0 ... 4	8	12	**76**	0 ... 50	100	150	**G6**
0 ... 6	12	15	**77**	0 ... 100	200	250	**G7**
0 ... 10	20	25	**78**	0 ... 150	300	375	**G8**
0 ... 16	32	40	**79**	0 ... 250	500	625	**G9**
0 ... 25	50	75	**80**	0 ... 400	800	1200	**H0**
0 ... 40	80	100	**81**	0 ... 500	1000	1250	**H1**

Sensor

Relative pressure, 1.4305	**54**	Absolute pressure, 1.4305 [2] [3]	**84**
Relative pressure, 1.4404/1.4435 [2]	**56**	Absolute pressure, 1.4404/1.4435 [2] [3]	**86**
Relative pressure, 1.4462	**50**	Absolute pressure, 1.4462 [3]	**80**
Relative pressure, Titanium Grade 5	**51**	Absolute pressure, Titanium Grade 5 [3]	**81**

Pressure connection

G1/4" female	**10**
G1/4" male	**17**
G1/2" male [2]	**21**
1/4"NPT male [2]	**30**
G3/4" frontal membrane [2] [4]	**52**

Electrical connection

Male electrical plug EN 175301-803-A, Mat. PA	**05**
Male electrical plug M12x1, 5-pole, Mat. PA	**35**
Male electrical plug industrial standard (contact distance 9.4 mm) Mat. PBT	**01**
Male electrical plug Packard Metri Pack	**51**
Cable IP67, Mat. PVC (cable gland PA6-3), -5°C ... +60°C [5] [6]	**22**
Cable IP68, max. 3m, medium +10°C...+35°C, Pmax. 1 bar rel./abs.	**68**

Output

Output	Load resistance	I (supply)	U (supply)	
4 ... 20 mA	(USupply–9V)/ 20mA		9 ... 30 VDC	**19**
0 ... 5 VDC	> 2.5 kΩ	< 10 mA	10 ... 30 VDC	**14**
1 ... 6 VDC	> 5.0 kΩ	< 10 mA	10 ... 30 VDC	**16**
0 ... 10 VDC	> 5.0 kΩ	< 10 mA	15 ... 30 VDC	**17**
0.5 ... 4.5 VDC	> 5.0 kΩ	< 10 mA	5 VDC ±0.25 V ratiometric	**23**

		8473 . XX	XX	XX	XX	XX	XX
Accessory	O-Ring FKM (-20°C ... +125°C)						**61**
	O-Ring CR ≤ 100 bar (-25°C ... +100°C) [7]						**62**
	O-Ring EPDM (-25°C ... +125°C)						**63**
	Pressure peak damping element Ø 1.0 mm (for pressure connections 17 and 30)						**40**
	Pressure peak damping element Ø 0.3 mm (for pressure connections 17 and 30)						**43**
	Pressure peak damping element Ø 0.5 mm (for pressure connections 17 and 30)						**45**
	Female electrical connector EN 175301-803-A (DIN 43650-A)						**58**
	Female electrical plug M12x1, 5-pole						**33**
	Female electrical connector industrial standard						**34**
	Special electrical connection: Pin 1 + , Pin 2 - (Only for output 4...20mA and male electrical plug EN175301-803-A / DIN43650-A)						**92**
	Special electrical connection: Pin 1 out , Pin 2 -, Pin 3 + (Only for output 0...5 VDC, 1...6 VDC, 0...10 VDC, 0.5...4.5 VDC and male electrical plug EN175301-803-A / DIN43650-A)						**98**
	Special electrical connection: Pin 1 + , Pin 2 -, Pin 3 out (Only for output 0...5 VDC, 1...6 VDC, 0...10 VDC, 0.5...4.5 VDC and male electrical plug EN175301-803-A / DIN43650-A)						**97**
	Special electrical connection: Pin 1 + , Pin 2 - (Only for male electrical plug Packard Metri Pack 3-pol.)						**99**
	Cable length 1.5 m						**1M**
	Cable length 3.0 m						**3M**
	Cable length 5.0 m						**5M**

[1] Extended overpressure as well as customized pressure ranges upon request
[2] Please ask us
[3] Only for ranges: ≥ 400 mbar or 5 psi
[4] Not for sensors 54 and 84
[5] Cable length see accessories
[6] More materials and cables with venting tubes for low pressure ranges upon request
[7] Not for pressure connection G3/4" frontal membrane

Identical construction for refrigeration:
Data sheet No. H72323

Standard products (extra short lead time)

Product No.	Type Code	Pressure range [bar]	Over pressure max. [bar]	Pressure connection	Signal output	Accuracy @ 25°C typ. [%]
ECT0.1A	8473 66 5417 05 0000 0000 19 58 61	0 ... 0.1	2	G1/4" male	4 ... 20 mA	1.0
ECT0.2A	8473 68 5417 05 0000 0000 19 58 61	0 ... 0.2	2	G1/4" male	4 ... 20 mA	0.5
ECT0.4A	8473 69 5417 05 0000 0000 19 58 61	0 ... 0.4	2	G1/4" male	4 ... 20 mA	0.5
ECT0.6A	8473 70 5417 05 0000 0000 19 58 61	0 ... 0.6	2	G1/4" male	4 ... 20 mA	0.3
ECT0.1V	8473 66 5417 05 0000 0000 17 58 61	0 ... 0.1	2	G1/4" male	0 ... 10 VDC	1.0
ECT0.2V	8473 68 5417 05 0000 0000 17 58 61	0 ... 0.2	2	G1/4" male	0 ... 10 VDC	0.5
ECT0.4V	8473 69 5417 05 0000 0000 17 58 61	0 ... 0.4	2	G1/4" male	0 ... 10 VDC	0.5
ECT0.6V	8473 70 5417 05 0000 0000 17 58 61	0 ... 0.6	2	G1/4" male	0 ... 10 VDC	0.3
ECTF0.1A	8473 66 5652 05 0000 0000 19 58 61	0 ... 0.1	2	G3/4" frontal membrane	4 ... 20 mA	1.0
ECTF0.2A	8473 68 5652 05 0000 0000 19 58 61	0 ... 0.2	2	G3/4" frontal membrane	4 ... 20 mA	0.5
ECTF0.4A	8473 69 5652 05 0000 0000 19 58 61	0 ... 0.4	2	G3/4" frontal membrane	4 ... 20 mA	0.5
ECTF0.6A	8473 70 5652 05 0000 0000 19 58 61	0 ... 0.6	2	G3/4" frontal membrane	4 ... 20 mA	0.3
ECTF1.0A	8473 71 5652 05 0000 0000 19 58 61	0 ... 1	2	G3/4" frontal membrane	4 ... 20 mA	0.3
ECTF1.6A	8473 73 5652 05 0000 0000 19 58 61	0 ... 1.6	3.2	G3/4" frontal membrane	4 ... 20 mA	0.3
ECTF2.5A	8473 75 5652 05 0000 0000 19 58 61	0 ... 2.5	5	G3/4" frontal membrane	4 ... 20 mA	0.3
ECTF4.0A	8473 76 5652 05 0000 0000 19 58 61	0 ... 4	8	G3/4" frontal membrane	4 ... 20 mA	0.3
ECTF6.0A	8473 77 5652 05 0000 0000 19 58 61	0 ... 6	12	G3/4" frontal membrane	4 ... 20 mA	0.3
ECTF10.0A	8473 78 5652 05 0000 0000 19 58 61	0 ... 10	20	G3/4" frontal membrane	4 ... 20 mA	0.3
ECTF25.0A	8473 80 5652 05 0000 0000 19 58 61	0 ... 25	50	G3/4" frontal membrane	4 ... 20 mA	0.3
ECTF40.0A	8473 81 5652 05 0000 0000 19 58 61	0 ... 40	80	G3/4" frontal membrane	4 ... 20 mA	0.3

Specifications

Electrical Data	Output / supply voltage	4...20 mA: 24 (9...30) VDC 0...5 VDC: 24 (10...30) VDC 1...6 VDC: 24 (10...30) VDC 0...10 VDC: 24 (15...30) VDC 0.5...4.5 VDC: 5 VDC ratiom.
	Rise time	Typ. 1 ms/ 10...90% nominal pressure
	Switch-on-delay	Max. 1.5 s
Environmental conditions	Media temperature	-25°C ... +125°C
	Ambient temperature	-25°C ... +85°C (Cable PVC 22: -5°C ... +60°C)
	Protection [1)]	Min. IP65
	Humidity	Max. 95 % relative
	Vibration	4 g (10...2000 Hz)
	Shock	50g/ 8 ms
EMC Protection	Emission	EN/IEC 61000-6-3
	Immunity	EN/IEC 61000-6-2
Mechanical Data	Sensor	Ceramic, Al_2O_3 (96 %)
	Housing / pressure connection	54/84: 1.4305 (AISI303) 56/86: 1.4404/1.4435 (AISI316L) 50/80: 1.4462 (AISI318LN) 51/81: Titanium Grade 5
	Sealing	FKM 70 Sh CR, EPDM
	Male electrical plug	See ordering information
	Weight	~ 110 g
	Mounting torque	15 ... 20 Nm

[1)] Provided female connector is mounted according to instructions

Accuracy

Pressure measuring range	**bar**	> 0 ... 0.4	0 ... 0.2 0 ... 0.4	0 ... 0.1 0 ... 0.16
	psi	> 0 ... 5	0 ... 2.5 0 ... 5	0 ... 1.5 0 ... 2
TEB @ -25...+85°C	[% FS typ.]	± 1.0	± 2.0	± 3.0
Accuracy @ +25°C	[% FS typ.]	± 0.3	± 0.5	± 1.0
NLH @ +25°C (BSL)	[% FS typ.]	± 0.2	± 0.3	± 0.3
TC zero point and span	[% FS/K typ.]	± 0.02	± 0.02	± 0.02
Long term stability 1 year @ +25°C	[% FS typ.]	± 0.2	± 0.2	± 0.2

Additional information

Documents	Data sheet	www.trafag.com/H72326
	Instructions	www.trafag.com/H73324
	Flyer	www.trafag.com/H70663

Measuring accuracy 1.0%

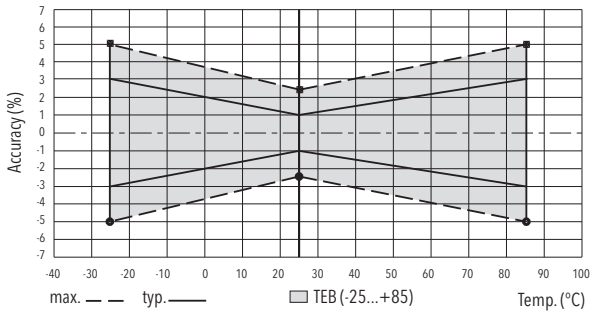

Measuring accuracy 0.5%

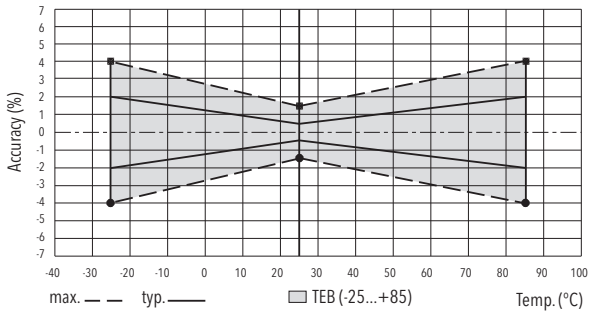

Measuring accuracy 0.3%

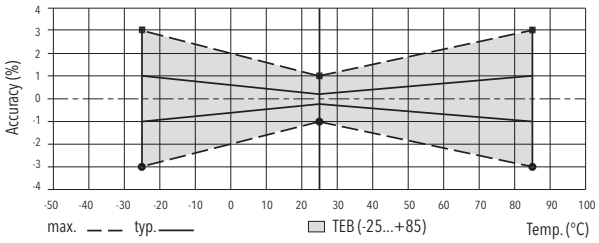

Electrical Connection

		Protection / electrical connection						
		IP65*)		IP65/IP68 max. 3m	IP67*)	IP67*)		IP65
		Industrial standard EN175301-803A **)		Cable**)	M12x1 **) 5-pole	Packard Metri Pack **) 3-pole		Industrial standard Contact distance 9.4 mm **)
		05		**22/68**	**35**	**51**		**01**
		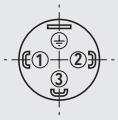		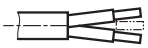	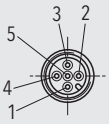	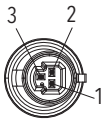		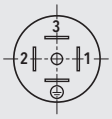
Output signal	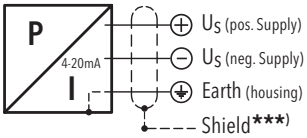 **8473**.xx.xxxx.xx.**19**	Standard	**92**				**99**	
		2	1	white	4	1	1	2
		1	2	brown	1	2	3	1
		⏚	⏚	⏚	5			⏚
	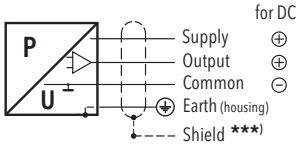 **8473**.xx.xxxx.xx.**14/16/17/23**	Standard	**98**	**97**			**99**	
		2	3	1	white	2	1	1	1
		3	1	3	green	4	3	2	2
		1	2	2	brown	3	2	3	3
		⏚	⏚	⏚	⏚	5			⏚

*) Provided female connector is mounted according to instructions

**) Ventilation via male electric plug/cable end

***) Only cable versions or female plug with shield connection

trafag sensors controls

Dimensions

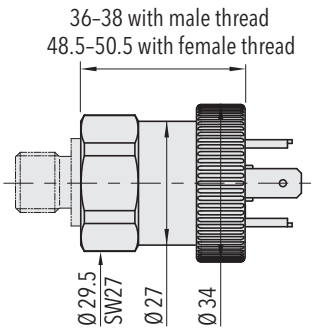

8473.XX.XXXX.**05**.XX.XX

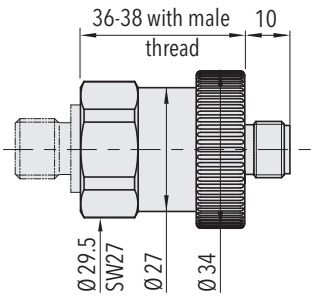

8473.XX.XXXX.**35**.XX.XX

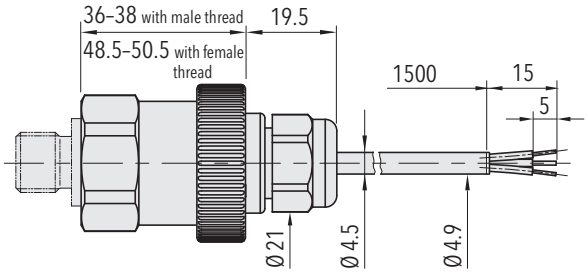

8473.XX.XXXX.**22**.XX.XX

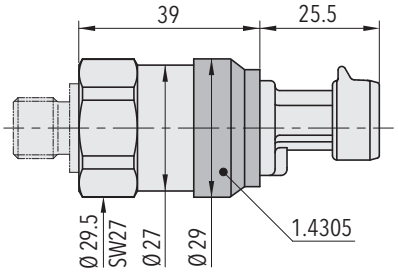

8473.XX.XXXX.**51**.XX.XX

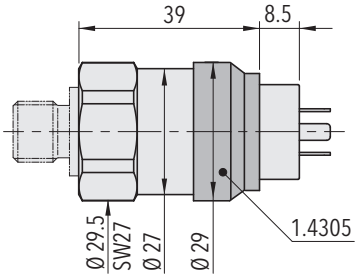

8473.XX.XXXX.**01**.XX.XX

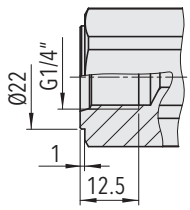

8473.XX.XX**10**.XX.XX.XX

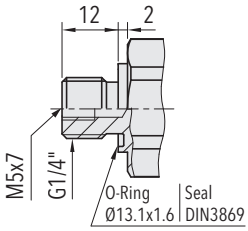

8473.XX.XX**17**.XX.XX.XX

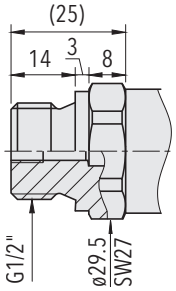

8473.XX.XX**21**.XX.XX.XX

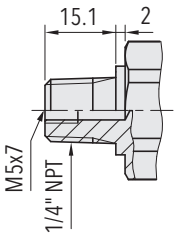

8473.XX.XX**30**.XX.XX.XX

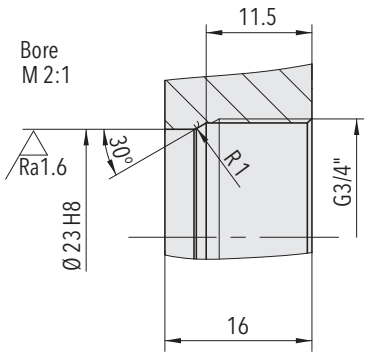

8473.XX.XX**52**.XX.XX.XX

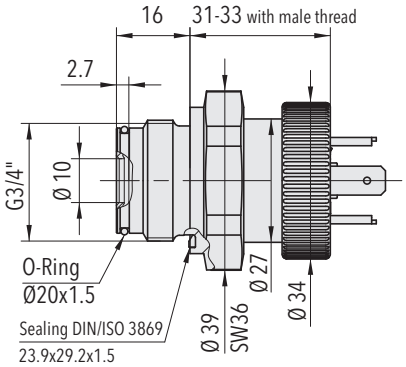

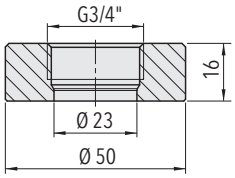

Welding flange for G3/4" frontal membrane (1.4301)
Ordering No. C27805

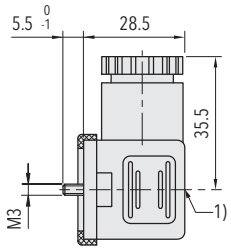

1) Tightening torque 50...60Ncm

8473.XX.XXXX.XX.XX.**58**

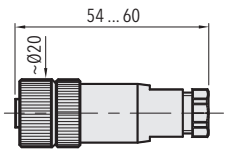

8473.XX.XXXX.XX.XX.**33**

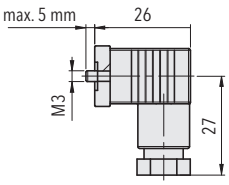

8473.XX.XXXX.XX.XX.**34**

trafag sensors & controls