novotechnik
Siedle Group

Short Stroke Transducer potentiometric 10 mm up to 150 mm

Series T / TS
Series TR / TRS

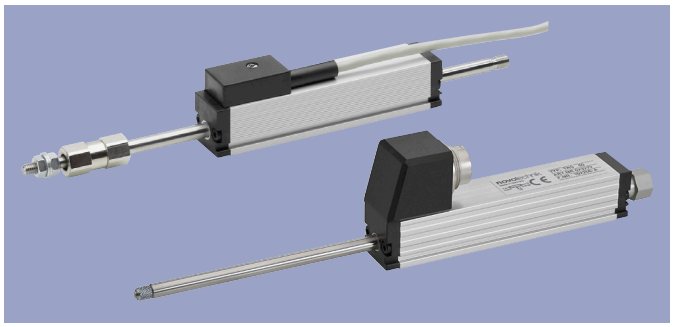

Compact transducer with proven conductive-plastic technology.
The model with push rod and ball coupling enables a backlash- and lateral force-free operation even with parallel and angular displacement of transducer and measuring direction. Characteristic for the robust design is the double-sided support of the actuating rod. For the spring-loaded type, this bearing allows high lateral forces on the tip of the rod which may occur during scanning of cams or wedge plates.

The connection of these potentiometric series is done at a high impedance voltage input or via signal conditioner.

Special features

- Extremely compact design 18 x 18 mm
- Long life up to 100 million movements
- Outstanding linearity up to ±0.075 %
- Repeatability to ±0.002 mm
- Models with push rod or spring-loaded with internal return spring
- Actuating shaft with double-sided support
- Compatible to standard probe tips
- Insensitive to shock and vibration
- Optionally cable or plug connection
- Special ball-coupling eliminates lateral forces
- High operational speeds - up to 10 m/s
- Low temperature coefficient < 20 ppm/K
- Series TE1 with integrated signal processing for normalized outputs current or voltage in same design see separate data sheet
- Inductive series LS1 in same design see separate data sheet

Applications

- Measuring / control technology
- Manufacturing Engineering
  Woodwork machines
  Riveting machines
  Packaging machines
  Welding machines
- Assembly / Test devices
- Medical appliances
- Building technology

novotechnik
Siedle Group

Contents

Mechanical data	3
Dimension drawing	4
Technical data	5
Ordering specifications	6
Accessories	
M16 connector system	7
Sensor mounting	9
Signal processing	9

Mechanical Data

Description						
Housing	aluminum AlMgSi, anodized					
Mounting	adjustable clamps 2 x Z-45 and 4 x cylinder screw M4x10 (included in delivery)					
Actuating rod	stainless steel AISI 303, 1.4305 spring-loaded type: with anti-twist safeguard, internal thread M2.5x6					
Ball coupling for push rod type	hardened ball with spring pressure on carbide plate (included in delivery)					
Probe tip for spring-loaded type	stainless steel with external thread M2.5 and pressed-in hardened metal ball (included in delivery)					
Bearings	double-sided DU glide bearings					
Resistance element	conductive-plastic					
Wiper	precious metal multi-finger wiper, elastomer damped					
Electrical connections Series T / TR Series TS / TRS	 3-pole cable, PVC insulated, 0.14 mm² (AWG 26), shielded, 2 m length 5-pin connector M16x0.75 (IEC 130-9), other connectors on request					
Mechanical Data						
Maximum permitted torque for mounting screws	140					Ncm
Push rod type	**T/TS-0025**	**T/TS-0050**	**T/TS-0075**	**T/TS-0100**	**T/TS-0150**	
Housing (dimension A)	63	88	113	138	188	+1 mm
Mechanical stroke (dimension B)	30	55	80	105	155	±1.5 mm
Maximum operational speed	10					m/s
Weight with cable with connector	 140 86	 160 107	 170 132	 190 150	 220 190	 g g
Weight of shaft with coupling and wiper	35	43	52	58	74	g
Operating force (horizontally)	≤ 0.30					N
Max. displacements of ball coupling	±1 mm parallel offset, ±2.5° angular offset					

Spring-loaded type	**TR-0010**	**TR/TRS-0025**	**TR/TRS-0050**	**TR/TRS-0075**	**TR/TRS-0100**	
Housing (dimension A)	48	63	94.4	134.4	166	+1 mm
Mechanical stroke (dimension B)	15	30	55	80	105	±1.5 mm
Flange nut SW-10 (dimension C)	7	12	12	12	12	mm
Excess length of push rod in end position (dimension D)	6	32	32	32	32	mm
Weight with cable with connector	 80	 120 74	 150 100	 180 128	 200 150	 g g
Weight of shaft with wiper	18	25	36	48	57	g
Operating force extended (horizontally) Operating force retracted (horizontally)	≤ 3.5 ≤ 5.0	≤ 2.5 ≤ 5.0	≤ 2.5 ≤ 5.0	≤ 2.5 ≤ 5.0	≤ 2.5 ≤ 5.0	N N
Operating force to end stop	max. 5					N
Operating frequency (maximum) *	20	18	14	11	10	Hz
Environmental Data						
Operating temperature	-30 ... +100					°C
Operating humidity range	0 ... 95 (no condensation)					% R.H.
Vibration (IEC 60068-2-6)	5 ... 2000 Amax = 0.75 amax = 20					Hz mm g
Shock (IEC 60068-2-27)	50 11					g ms
Life	> $100x10^6$					movem.
Protection class (DIN EN 60529)	IP40					

*) Data refer to critical application “probe tip upwards”

Dimension drawing

Push rod type - cable outlet
Series T

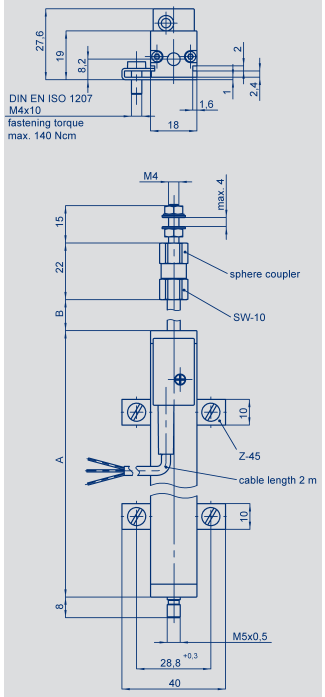

Push rod type - connector outlet
Series TS

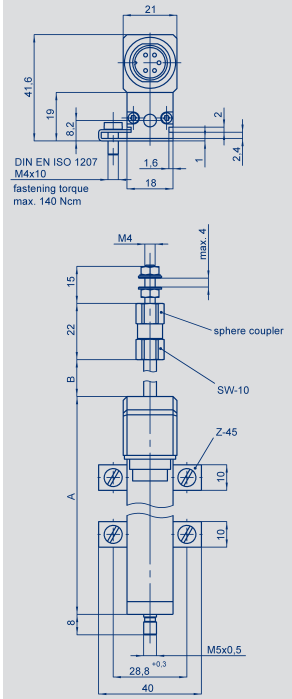

Spring-loaded type - cable outlet
Series TR

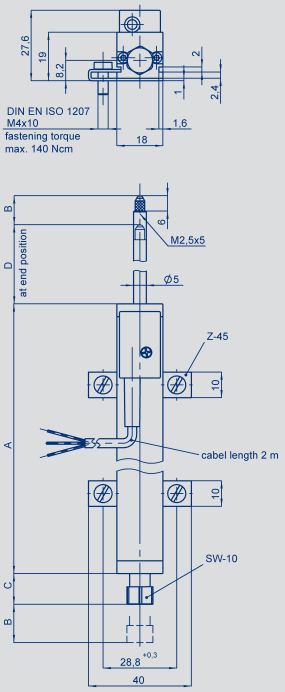

Spring-loaded type - connector outlet
Series TRS

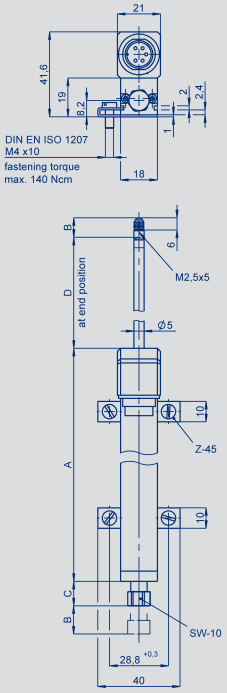

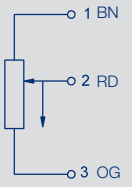

Schematic

CAD data see
www.novotechnik.de/en/download/cad-data/

Technical data

Electrical Data							
Push rod type **Spring-loaded type**	**TR-0010**	**T/TS-0025** **TR/TRS-0025**	**T/TS-0050** **TR/TRS-0050**	**T/TS-0075** **TR/TRS-0075**	**T/TS-0100** **TR/TRS-0100**	**T/TS-0150**	
Defined eletrical range	10	25	50	75	100	150	mm
Electrical stroke	12	27	52	77	102	152	mm
Nominal resistance	1	1	5	5	5	5	kΩ
Resistance tolerance	20						±%
Independent linearity	≤ 0.25	0.2	0.15	0.1	0.075	0.075	±%
Repeatability	≤ 0.002						±mm
Recommended operating wiper current	≤ 1						µA
Maximum wiper current in case of malfunction	10						mA
Maximum permissible applied voltage	24	42	42	42	42	42	V
Effective temperature coefficient of the output-to-applied voltage ratio	typ. 5						ppm/K
Insulation resistance (500 VDC)	≥ 10						MΩ
Dielectric strength (500 VAC, 50 Hz)	≤ 100						µA

Important
All values specified in this data sheet for linearity, lifetime and temperature coefficient are only valid for a sensor used as a voltage divider with virtually no load applied to the wiper (Ie ≤ 1 µA).

Ordering Specifications

Ordering specifications	
Push rod type	**P/N**
T-0025	023202
TS-0025	023232
T-0050	023203
TS-0050	023233
T-0075	023204
TS-0075	023234
T-0100	023205
TS-0100	023235
T-0150	023206
TS-0150	023236

Available on request		
Push rod type	**P/N**	**independent linearity**
T-0025-1	023207	±0.1 %
TS-0025-1	023237	±0.1 %
T-0050-1	023208	±0.1 %
TS-0050-1	023238	±0.1 %
T-0050-05	023209	±0.05 %
TS-0050-05	023239	±0.05 %
T-0075-05	023213	±0.05 %
TS-0075-05	023243	±0.05 %
T-0100-05	023214	±0.05 %
TS-0100-05	023244	±0.05 %
T-0150-05	023215	±0.05 %
TS-0150-05	023245	±0.05 %

Spring-loaded type	
TR-0010	023260
TR-0025	023261
TRS-0025	023271
TR-0050	023262
TRS-0050	023272
TR-0075	023263
TRS-0075	023273
TR-0100	023264
TRS-0100	023274

Spring-loaded type		
TR-0025-1	023265	±0.1 %
TRS-0025-1	023275	±0.1 %
TR-0050-1	023266	±0.1 %
TRS-0050-1	023276	±0.1 %
TR-0050-05	023267	±0.05 %
TRS-0050-05	023277	±0.05 %
TR-0075-05	023268	±0.05 %
TRS-0075-05	023278	±0.05 %
TR-0100-05	023269	±0.05 %
TRS-0100-05	023279	±0.05 %

Accessories
Connector system M16

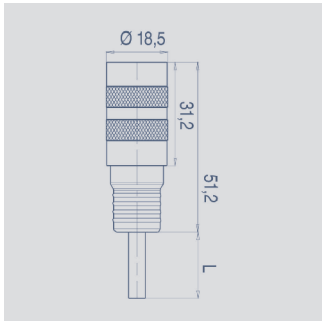

Pin assignment

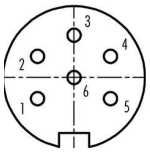

1 = red
2 = black
3 = yellow
4 = blue
5 = white
6 = green

IP67

M16x0.75 Mating female connector, 6-pin, straight, with molded cable, 2 m length, shielded, IP67, open ended

Connector housing	PUR
Cable sheath	PUR; Ø max. 6 mm, -5...+70 °C (moved) -20...+70 °C (fixed)
Wires	PVC, 6 x 0.25 mm²
Type EEM 33-26, P/N 056126	

This coupling can can be used in combination with 5-pin M16 connectors. Than „pin 6/ green“ is open.

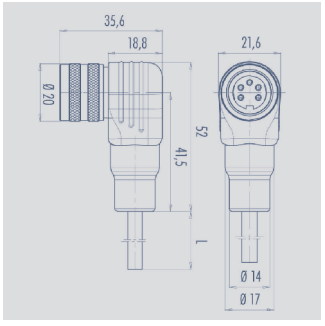

Pin assignment

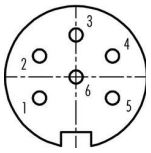

1 = red
2 = black
3 = yellow
4 = blue
5 = white
6 = green

IP67

M16x0.75 Mating female connector, 6-pin, angled, with molded cable, 2 m length, shielded, IP67, open ended

Connector housing	PUR
Cable sheath	PUR; Ø max. 6 mm, -5...+70 °C (moved) -20...+70 °C (fixed)
Wires	PVC, 6 x 0.25 mm²
Type EEM 33-27, P/N 056127	

This coupling can can be used in combination with 5-pin M16 connectors. Than „pin 6 / green“ is open.

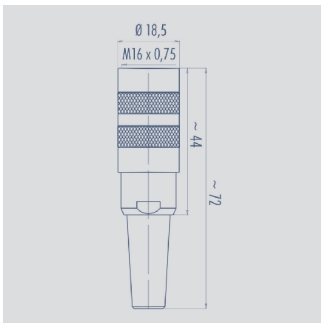

Pin assignment

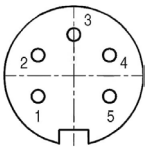

IP40

M16x0.75 Mating female connector, 5-pin, straight, with coupling nut, solder terminal, IP40, shielded

Connector housing	CuZn (Brass, nickel plated) -40 °C... +85 °C
For wire gauge	4...6 mm, max. 0.75 mm²
Type EEM 33-71, P/N 005612	

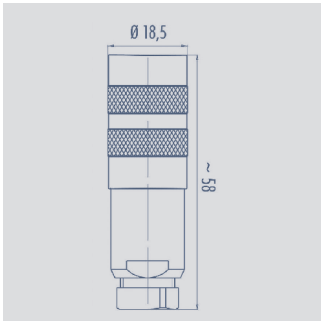

Pin assignment

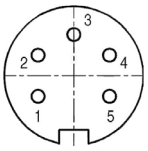

IP67 UL

M16x0.75 Mating female connector, 5-pin, straight, with coupling nut, solder terminal, IP67, shielded

Connector housing	CuZn (Brass, nickel plated) -40 °C... +95 °C
For wire gauge	4...6 mm, PG7 max. 0.75 mm²
Type EEM 33-76, P/N 005614	

Accessories
Connector system M16

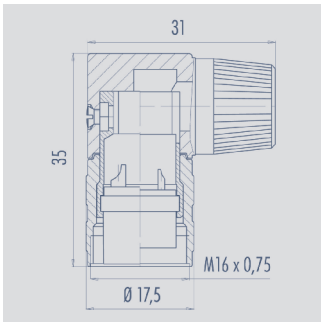

Pin assignment

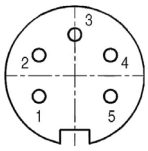

IP40

M16x0.75 Mating female connector, 5-pin, angled, with coupling nut, solder terminal, IP40, not shielded

Connector housing	Plastic PA -40 °C... +85 °C
For wire gauge	6...8 mm, max. 0.75 mm²
Type EEM 33-72, P/N 005613	

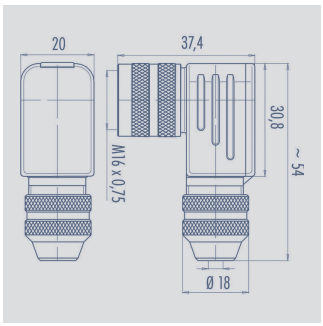

Pin assignment

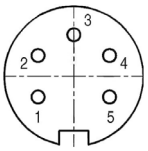

IP67 UL

M16x0.75 Mating female connector, 5-pin, angled, with coupling nut, solder terminal, IP67, shielded

Connector housing	CuZn (Brass, nickel plated) -40 °C... +95 °C
For wire gauge	4...6 mm, PG 7 max. 0.75 mm²
Type EEM 33-77, P/N 005615	

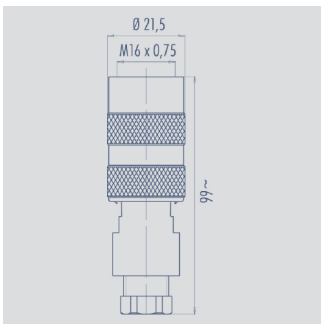

Pin assignment

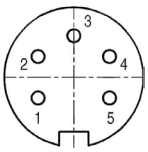

IP67

M16x0.75 Mating female connector, 5-pin, straight, with coupling nut, solder terminal, IP67, not shielded

Connector housing	Plastic PA -40 °C... +95 °C
For wire gauge	4...6 mm, max. 0.75 mm²
Type EEM 33-70, P/N 005611	

IP40 Protection class IP40 (DIN EN60529)

IP67 Protection class IP67 (DIN EN60529)

Very good Electromagnetic Compatibilty (EMC) and shielded systems

UL UL - approved

Note: The protection class is valid only in locked position with its plugs. The application of these products in harsh environments must be checked in particular cases.

Accessories
Sensor mounting
Signal processing

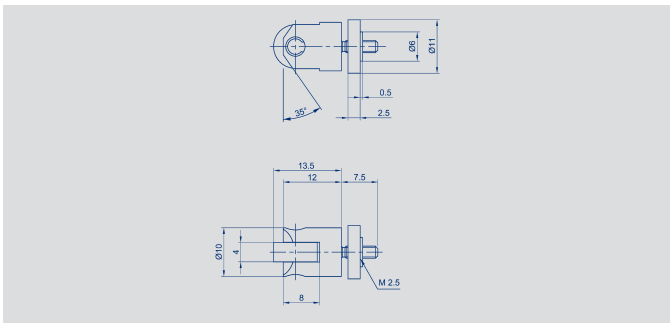

Roller head, hardened steel.
Mounting via external thread M2.5 at push rod. Lock with knurled screw.

Type Z-R50, P/N 005678

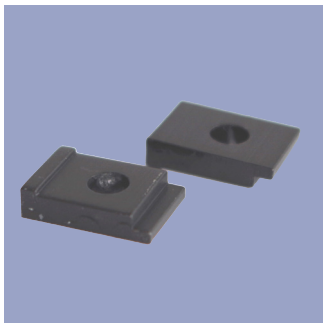

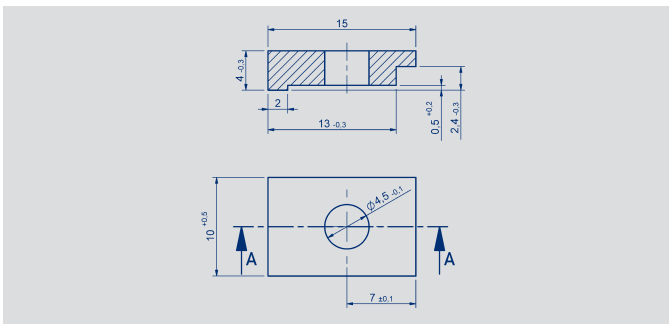

Clamps
4 single clamps, anodized aluminum, with screw M4x10 - 4.8 tinned, for lower total height

Type Z-FTI-B01, P/N 059010

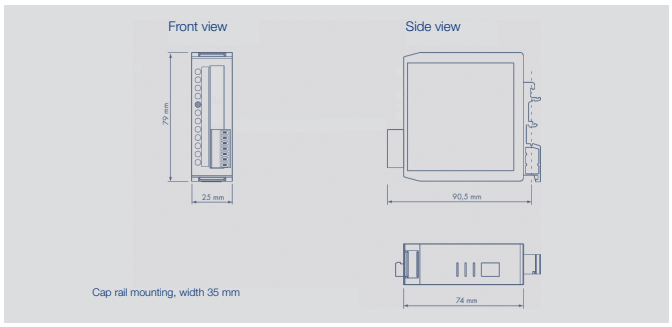

Signal conditioner
Cost-efficient basic version with fixed output range, voltage or current output. Not adjustable.

Type MUP-080, P/N 05422x

Detailed data see separate
Data sheet MUP-080

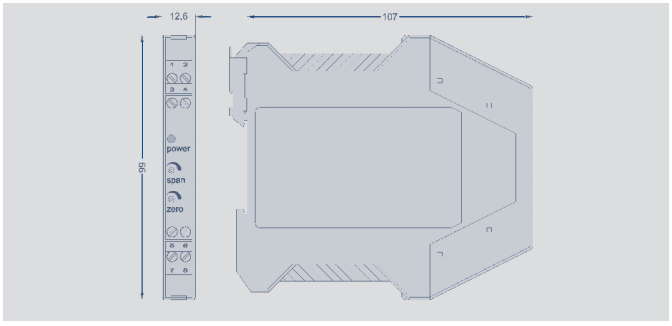

Signal conditioner
Voltage or current output, adjustable zero and span. Available with or without electrical isolation. Compact size.

Type MUP-110-x, P/N 05401x
Type MUP-160-x, P/N 05406x

Detailed data see separate
Data sheet MUP-110_160

Novotechnik
Messwertaufnehmer OHG

Postfach 4220
73745 Ostfildern (Ruit)
Horbstraße 12
73760 Ostfildern (Ruit)

Telefon +49 711 4489-0
Telefax +49 711 4489-118
info@novotechnik.de
www.novotechnik.de

© 02/2017
Printed in Germany

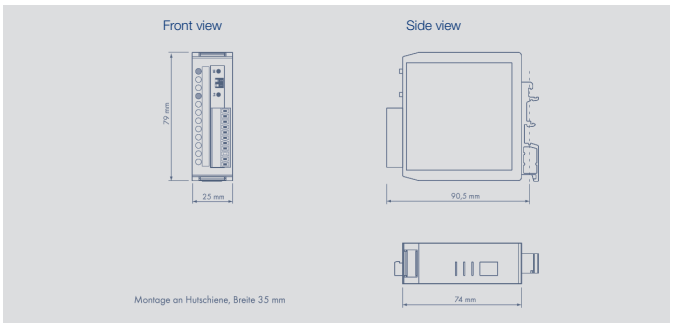

Signal conditioner
Simple teach-in function to adapt start and end point. Switchable current or voltage output.

Type MUP-400, P/N 05420x

Detailed data see separate
Data sheet MUP-400

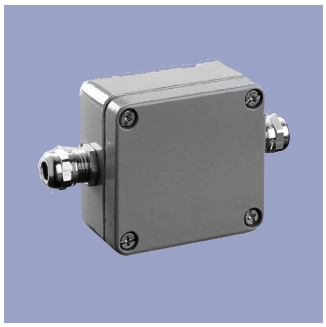

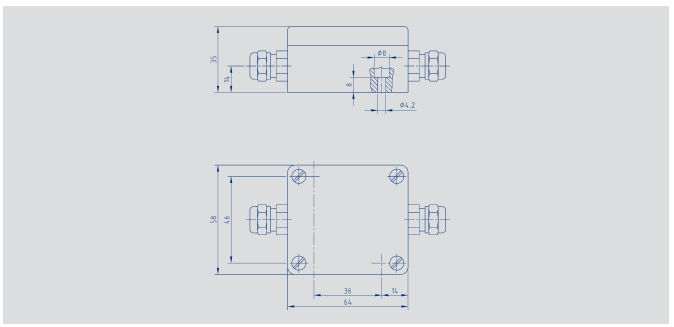

Signal conditioner
Electronics inside robust housing even for outside use. Zero point and span adjustable.

Type MUK-350, P/N 05417x

Detailed data see separate
Data sheet MUK-350

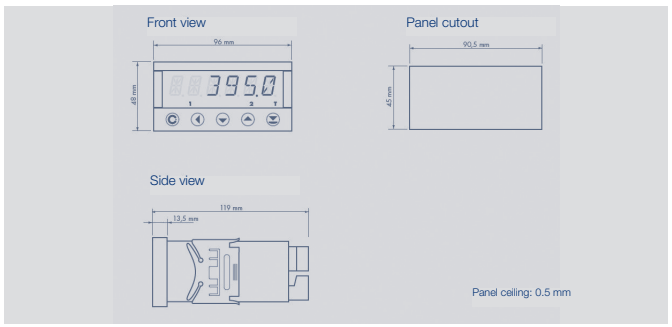

Multifunctional Display
Microprocessor-controlled measuring devices for direct connection of potentiometric sensors or sensors with standardized analog output signals.
- accuracy up to 0.1 %
- display range -99 999...999 999
- good cost/value ratio

Type MAP-40 _ _ - _ _ _ - _ _ _

Detailed data see separate
Data sheet MAP-4000

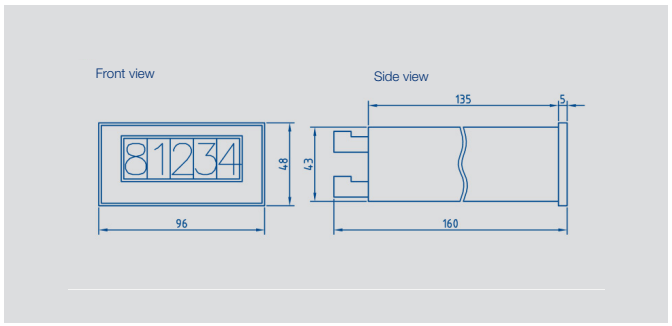

Multifunctional displays
Microprocessor-controlled measuring devices with galvanic isolation for direct connection of potentiometric sensors or sensors with standardized analog output signals.
- accuracy up to 0.01 %
- display range -9 999...40 000

Type MAP-3(4) _ _-_ - _ _ - _ _

Detailed data see separate
Data sheet MAP-300/400

The specifications contained in our datasheets are intended solely for informational purposes. The documented specification values are based on ideal operational and environmental conditions and can vary significantly depending on the actual customer application. Using our products at or close to one or more of the specified performance ranges can lead to limitations regarding other performance parameters. It is therefore necessary that the end user verifies relevant performance parameters in the intended application. We reserve the right to change product specifications without notice.