■Features

Barometric pressure measurable
On-chip amplification and temperature compensations
Pre-calibration of offset voltage and span
Dual-in-line package (DIP)

■Applications

・Industrial instrumentation
・Medical device
・Barometer, Altimeter
・Altitude compensation

■Part number for ordering

XFPM－115KP A R

- XFPM: Model
- 115: Rated Pressure (kPa)
- A: Pressure type — A：Absolute pressure
- R: Terminal leadsdirection
  - No Mark：
  - R ：

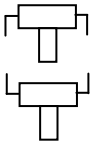

	Weight (grams)
	1.5

RoHS compliance

Measurable pressure range(kPa･abs)	Part number for ordering	
15～115	XFPM-115KPA	XFPM-115KPAR

■Specifications

Model	XFPM-115KPA ／ XFPM-115KPAR	Unit
Recommended operating conditions		
Pressure type	Absolute pressure	―
Rated pressure	115	kPa･abs
Measurable pressure range	15～115	kPa･abs
Temperature range	0～85	℃
Pressure media	Non-corrosive gases only (No liquid)	―
Supply voltage（constant）	5±0.25	VDC
Absolute maximum rating		
Maximum load pressure	Twice of rated pressure	―
Maximum excitation voltage	8	VDC
Operating temperature	-40～125	℃
Storage temperature	-40～125	℃
Operating humidity	30～80 (Non dew condition)	%RH
Electrical characteristics (Excitation voltage Vcc=5.0V constant ,ambient temperature Ta=25℃)		
Power consumption	10mA max.	mA
Output impedance	10Ω max.	Ω
Source current	0.2mA max.	mA
Sink current	2mA max.	mA
Response time	2 (for the reference)	msec
Output span voltage	4.5	V
Offset voltage *	0.2±0.1125 (at 15 kPa･abs)	V
Output voltage at full scale *	4.7±0.1125 (at 115kPa･abs)	V
Accuracy *	±2.5	%FS/0～85℃

* Excluding input voltage error.

"Tsunagu" Technology Fujikura

■Outline dimensions■

Unit : mm

XFPM (Absolute pressure)

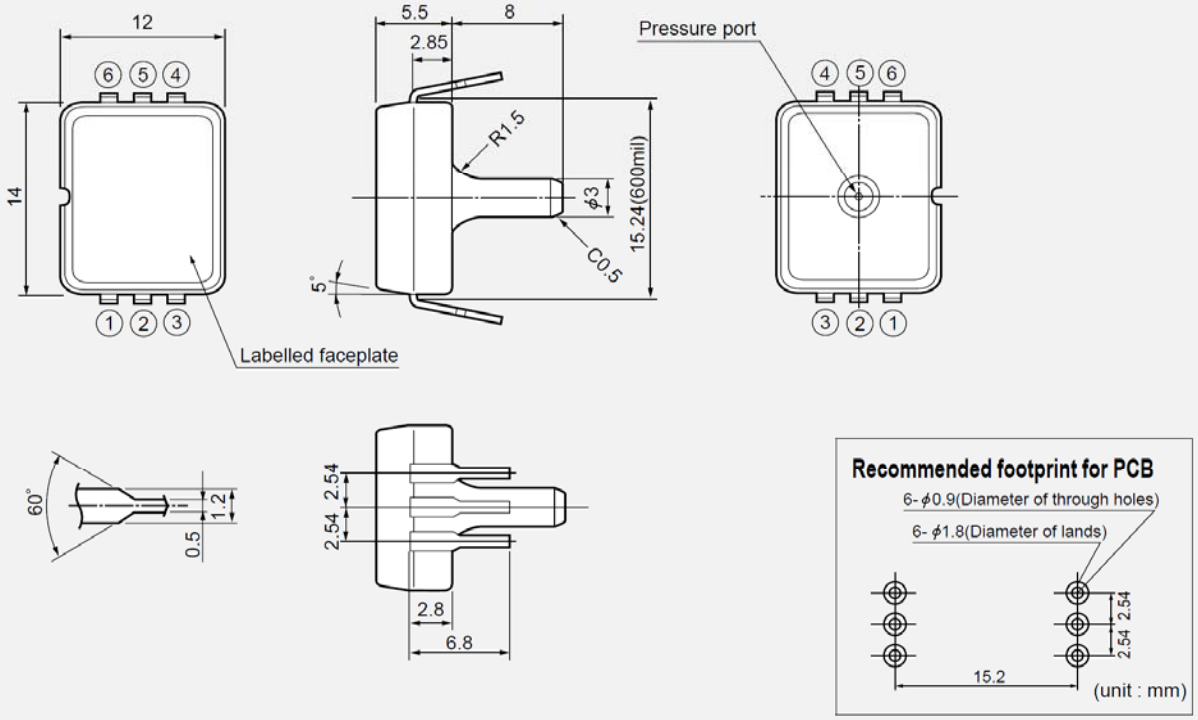

Unit : mm

XFPM-R (Absolute pressure)

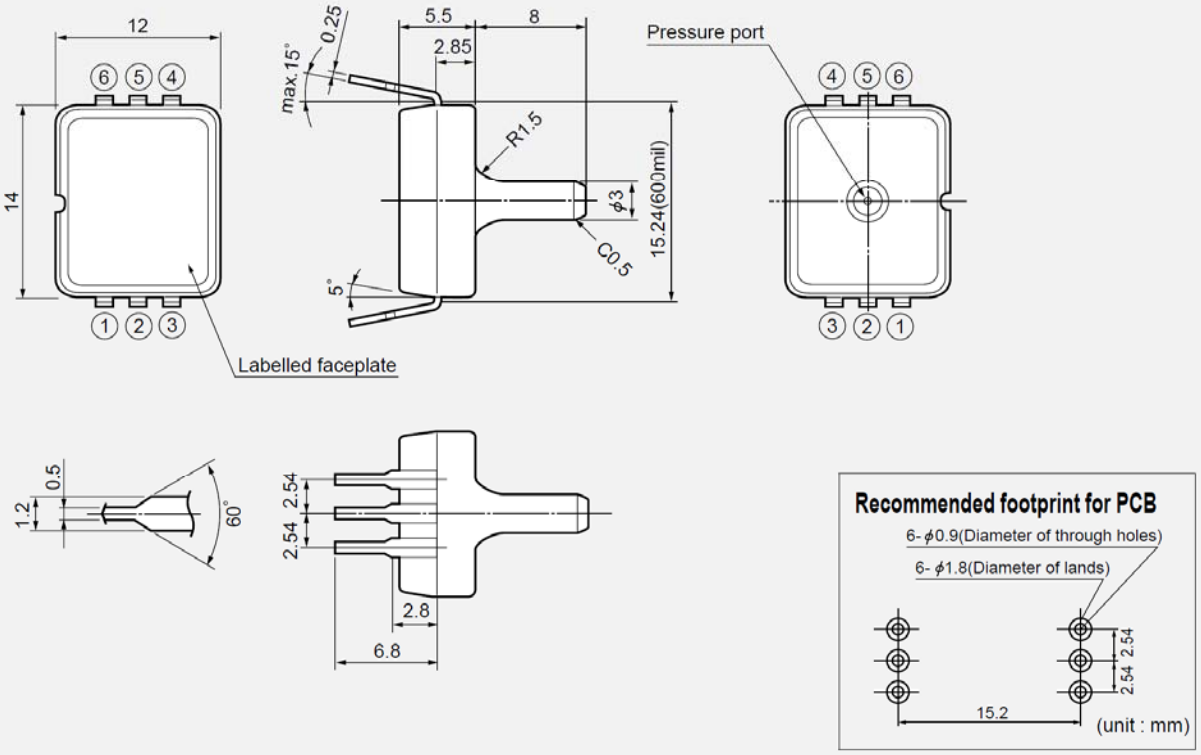

■Connection diagram■

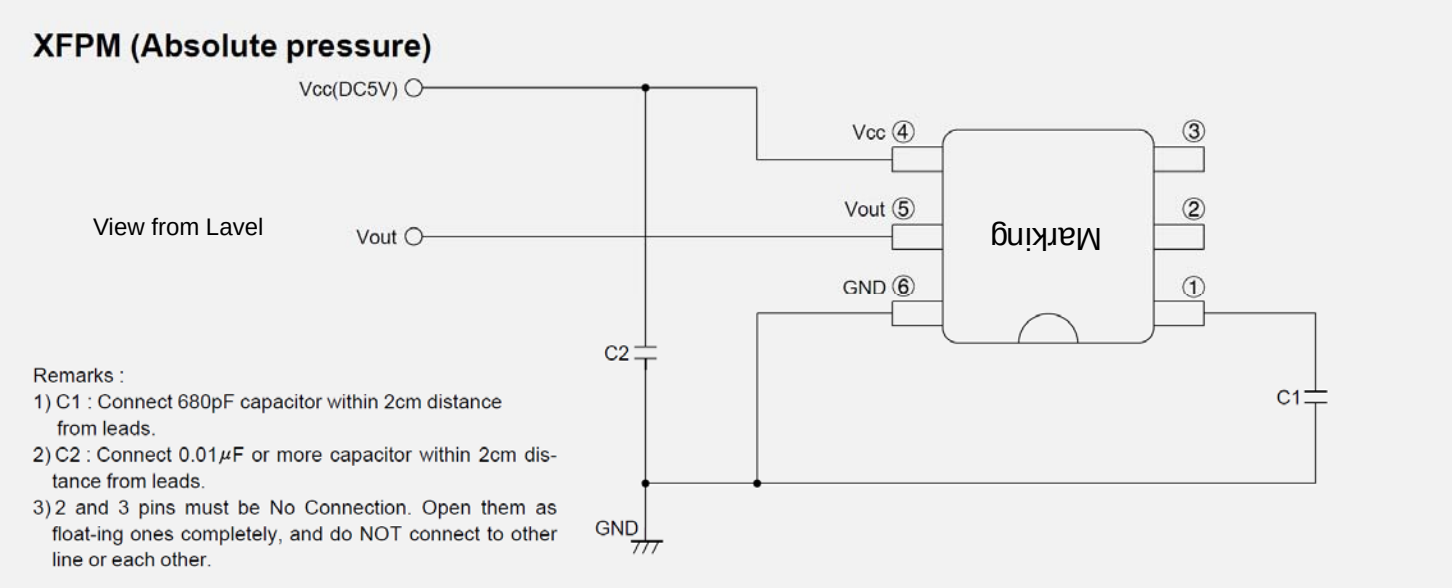

■Transfer Function■

Vout = Vs × (P × α + β) ± (Pressure Error × Temperature Error Multiplier × α × Vs)

Vs=Vcc=5.0V

P=Input pressure(kPa･abs)

α	β	Pressure Error (kPa)
0.009	-0.095	2.5

Temperature Error Multiplier

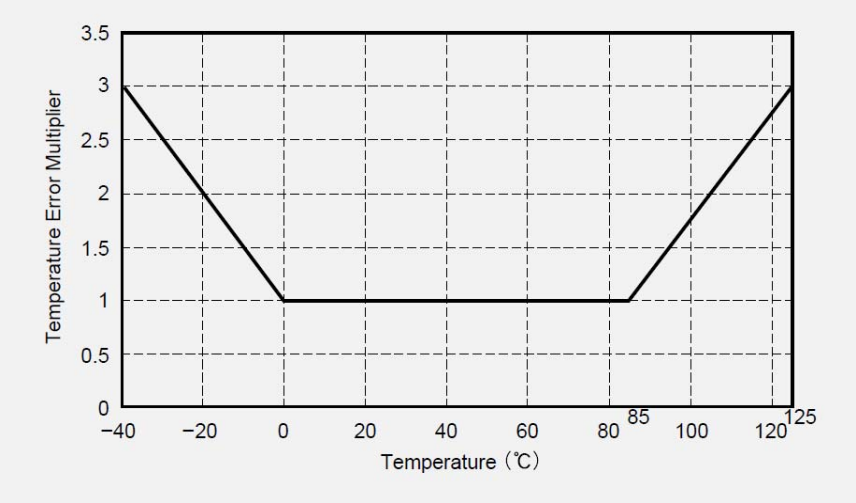

■Output characteristics■

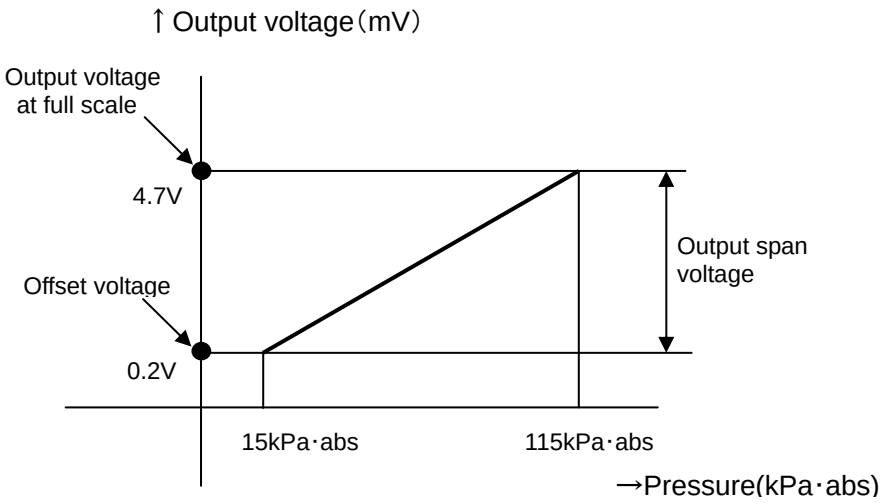

Note ; Please read instruction “Notes” before using the sensor.
Fujikura reserves the right to change specifications without notice.

If you have any questions regarding technical issues or specifications, please contact us.
Sensor Engineering Department 5-1 Kiba 1-chome, Koto-ku, Tokyo 135-8512, Japan
Phone +81-(0)3-5606-1072
E-mail : sensor@fujikura.co.jp