■Features

On-chip amplification and temperature compensations
Pre-calibration of offset voltage and span
Surface mount package

■Applications

・Home use Non-Invasive Blood Pressure (NIBP) monitors
・Vacuum cleaner
・Washing machine

■Part number for ordering

XFGN－6　025KP　G　SR

- XFGN: Model
- 6: Length of the pressure port
  - 6：6mm
- 025KP: Rated Pressure (kPa)
- G: Pressure type
  - G：Gauge(Positive pressure)
  - GV：Gauge Pressure(Negative pressure)
- SR: Terminal leads configuration
  - Surface mount package

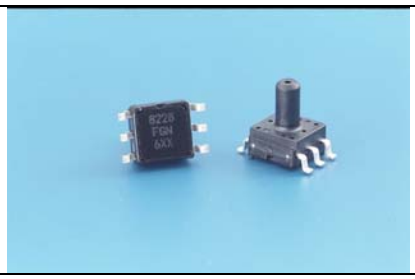

Weight (grams)
0.35

RoHS compliance

Measurable pressure range(kPa)	Part number for ordering
0～-24.5	XFGN-603PGVSR
0～-100	XFGN-6100KPGVSR
0～25	XFGN-6025KPGSR
0～50	XFGN-6050KPGSR
0～100	XFGN-6100KPGSR
0～200	XFGN-6200KPGSR

■Specifications

Model	603PGV	6100KPGV	6025KPG	6050KPG	6100KPG	6200KPG	Unit
Recommended operating conditions							
Pressure type	Gauge pressure						—
Rated pressure	-24.5	-100	25	50	100	200	kPa
Measurable pressure range	0～-24.5	0～-100	0～25	0～50	0～100	0～200	kPa
Temperature range	0～50						℃
Pressure media	Non-corrosive gases only (No liquid)						—
Supply voltage（constant）	5±0.25						VDC
Absolute maximum rating							
Maximum load pressure	Twice of rated pressure						—
Maximum excitation voltage	8						VDC
Operating temperature	-10～80						℃
Storage temperature	-20～100						℃
Operating humidity	30～80 (Non dew condition)						%RH
Electrical characteristics (Excitation voltage Vcc=5.0V constant ,ambient temperature Ta=25℃)							
Power consumption	10mA max.						mA
Output impedance	10Ω max.						Ω
Source current	0.2mA max.						mA
Sink current	2mA max.						mA
Response time	2 (for the reference)						msec
Output span voltage	4.0						V
Offset voltage *	0.5±0.1 (at 0 kPa)						V
Output voltage at full scale *	4.5±0.1 (at rated pressure)						V
Accuracy *	±5.0						%FS/0～50℃

* Excluding input voltage error.

"Tsunagu" Technology Fujikura

■Outline dimensions■

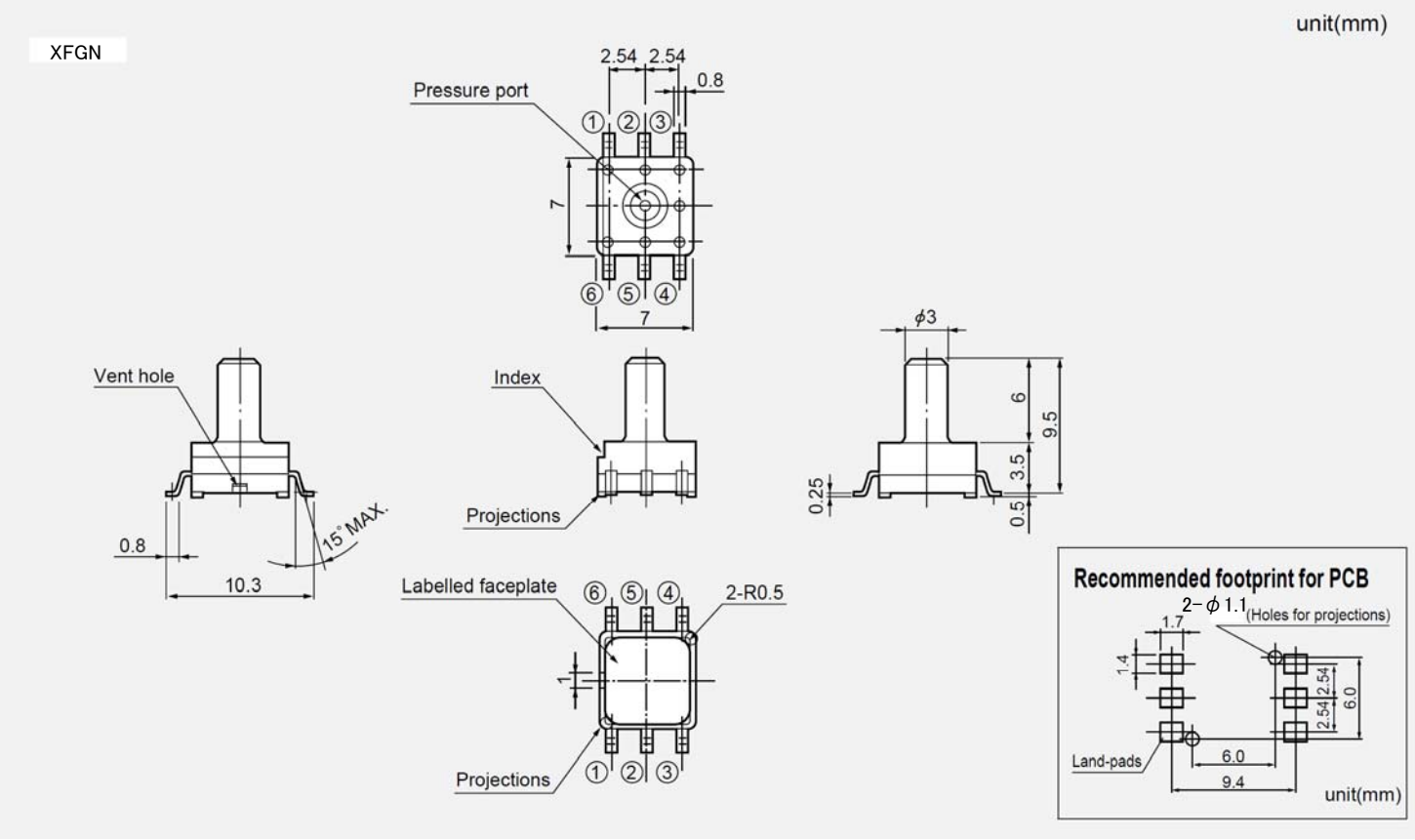

■Connection diagram■

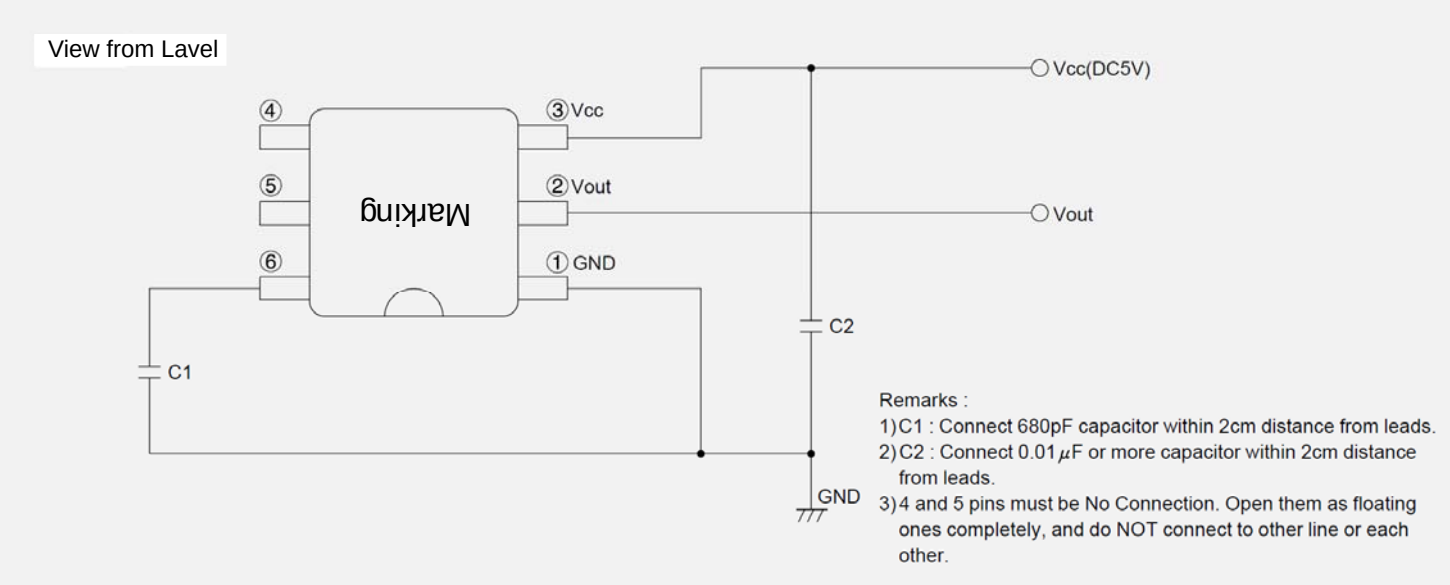

■Transfer Function■

Vout = Vs × (P × α + β) ± (Pressure Error × Temperature Error Multiplier × α × Vs)

Vs=Vcc=5.0V

P=Input pressure(kPa)

Model	Measurable pressure range(kPa)	α	β	Pressure Error (kPa)
XFGN-603PGVSR	0～-24.5	-0.03266	0.1	0.612
XFGN-6100KPGVSR	0～-100	-0.008	0.1	2.5
XFGN-6025KPGSR	0～25	0.032	0.1	0.625
XFGN-6050KPGSR	0～50	0.016	0.1	1.25
XFGN-6100KPGSR	0～100	0.008	0.1	2.5
XFGN-6200KPGSR	0～200	0.004	0.1	5

Temperature Error Multiplier

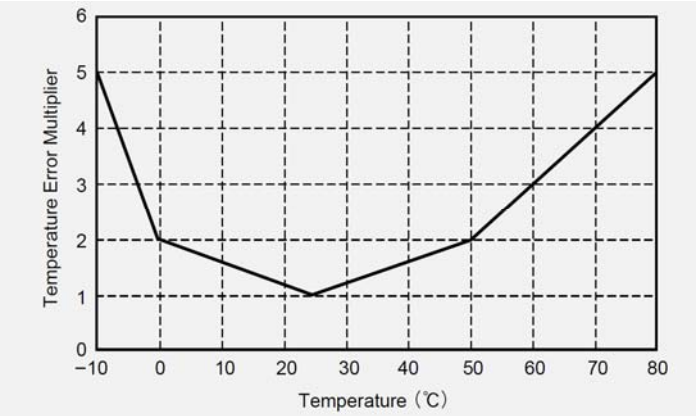

■Output characteristics■

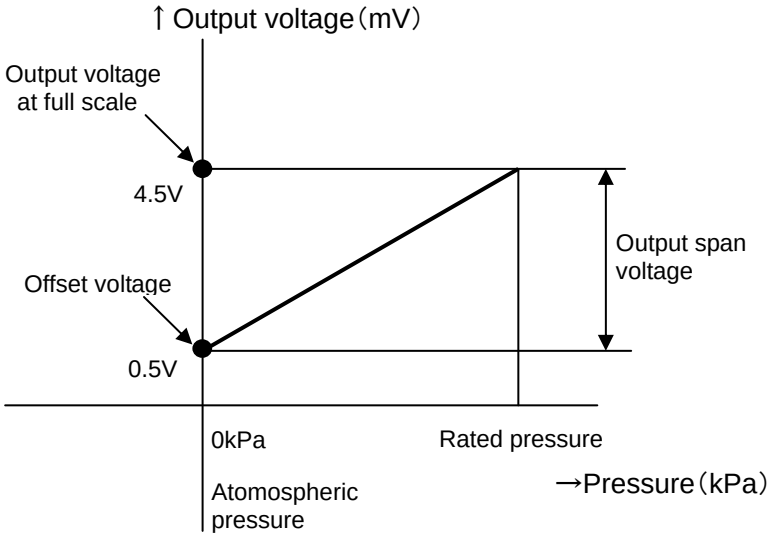

Note ; Please read instruction “Notes” before using the sensor.
Fujikura reserves the right to change specifications without notice.

If you have any questions regarding technical issues or specifications, please contact us.
Sensor Engineering Department 5-1 Kiba 1-chome, Koto-ku, Tokyo 135-8512, Japan
Phone +81-(0)3-5606-1072
E-mail : sensor@fujikura.co.jp

“Tsunagu” Technology Fujikura